MEGA ST

Schaltbilder, Bestückungspläne

Parts List (nur für Händler)

Schaltungsdienst Lange
Circuit-Diagram-Service in Germany
D-1000 Berlin 47

2

REV.	REVISIONS DESCRIPTION	DATE	APPROVED
1	PRELIMINARY RELEASE	2/19/87	
2	DELETE RES. & CAP. (R1, C2)	1-9-87	
3	REVISED	2/19/87	

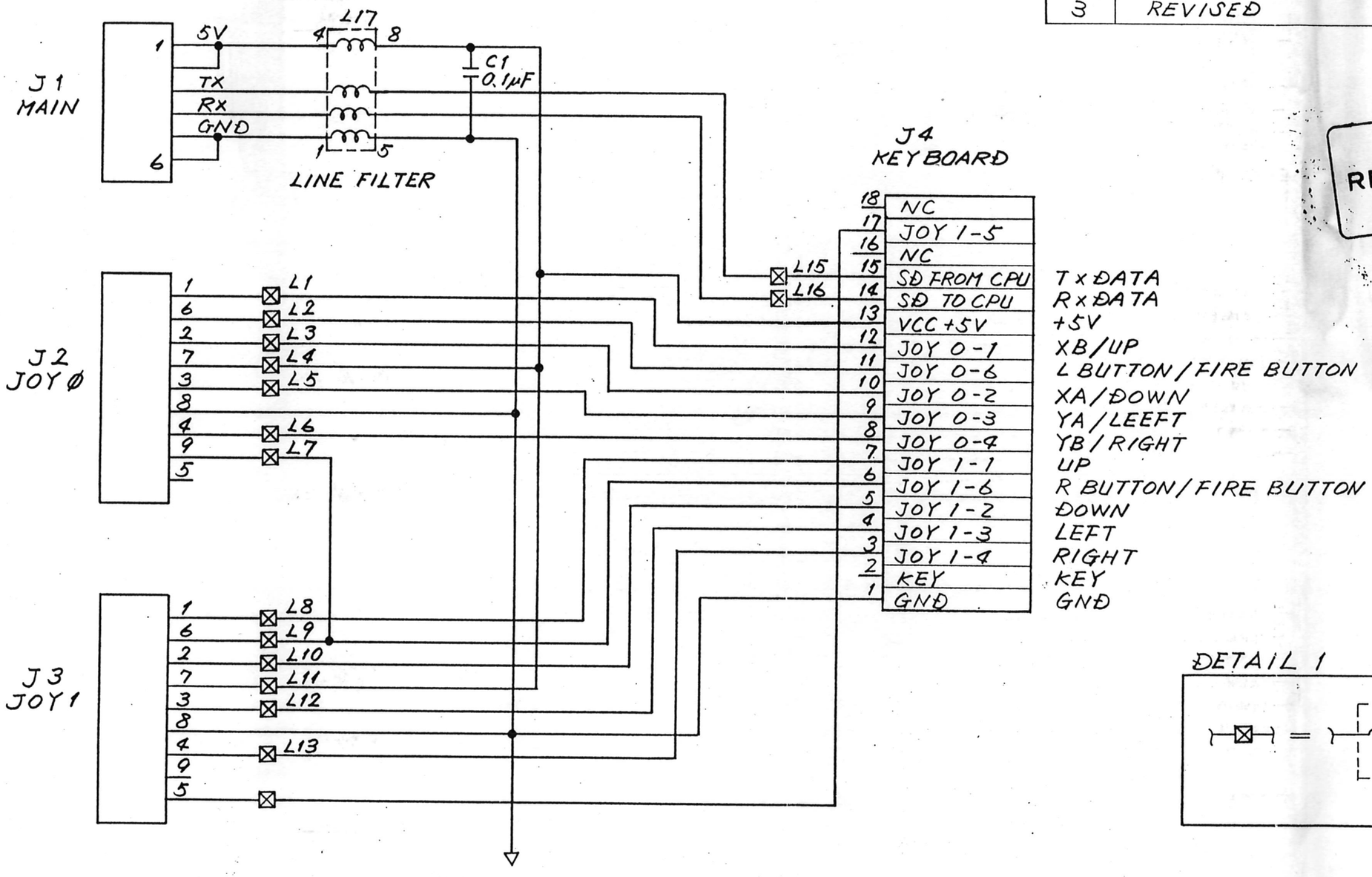

REFERENCE ONLY

DETAIL 1

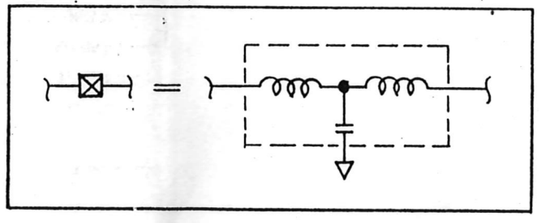

2. USE SUPPLIED P.C.B. C100063, REV. 1

1. NOISE FILTER : SEE DETAIL 1 .

NOTES—UNLESS OTHERWISE SPECIFIED:

NEXT ASSY	USED ON
CA200042-XXX	MEGA ST KEYBOARD

APPLICATION

TOLERANCES	
UNDER 30	±0.1.
30 THRU 300	±0.2
OVER 300	±0.4

MATERIAL

FINISH

		DATE
DRAWN BY	I. Yoshida	10-24-86
CHECKED	K. Kitagawa	10-27-86
ENGINEER	A. Shinagawa	2-16-87
APPROVED	S. OKAZAKI	2/18/87
APPROVED		2/19/87

ATARI

ATARI (JAPAN) CORPORATION
Toranomon Kiyoshi Building 3F
4-3-10, Toranomon Minato-ku, Tokyo 105

TITLE SCHEMATIC DIAGRAM FOR SUB P.C.B. (MEGA ST KEYBOARD)

SIZE	DRAWING NO.	REV
B	C100069	3

SCALE NONE SHEET 1 OF 1

THIRD ANGLE SYSTEM, DIMENSION: mm

3

REV	REVISIONS DESCRIPTION	DATE	APPROVED
	SEE SHEET 1.		

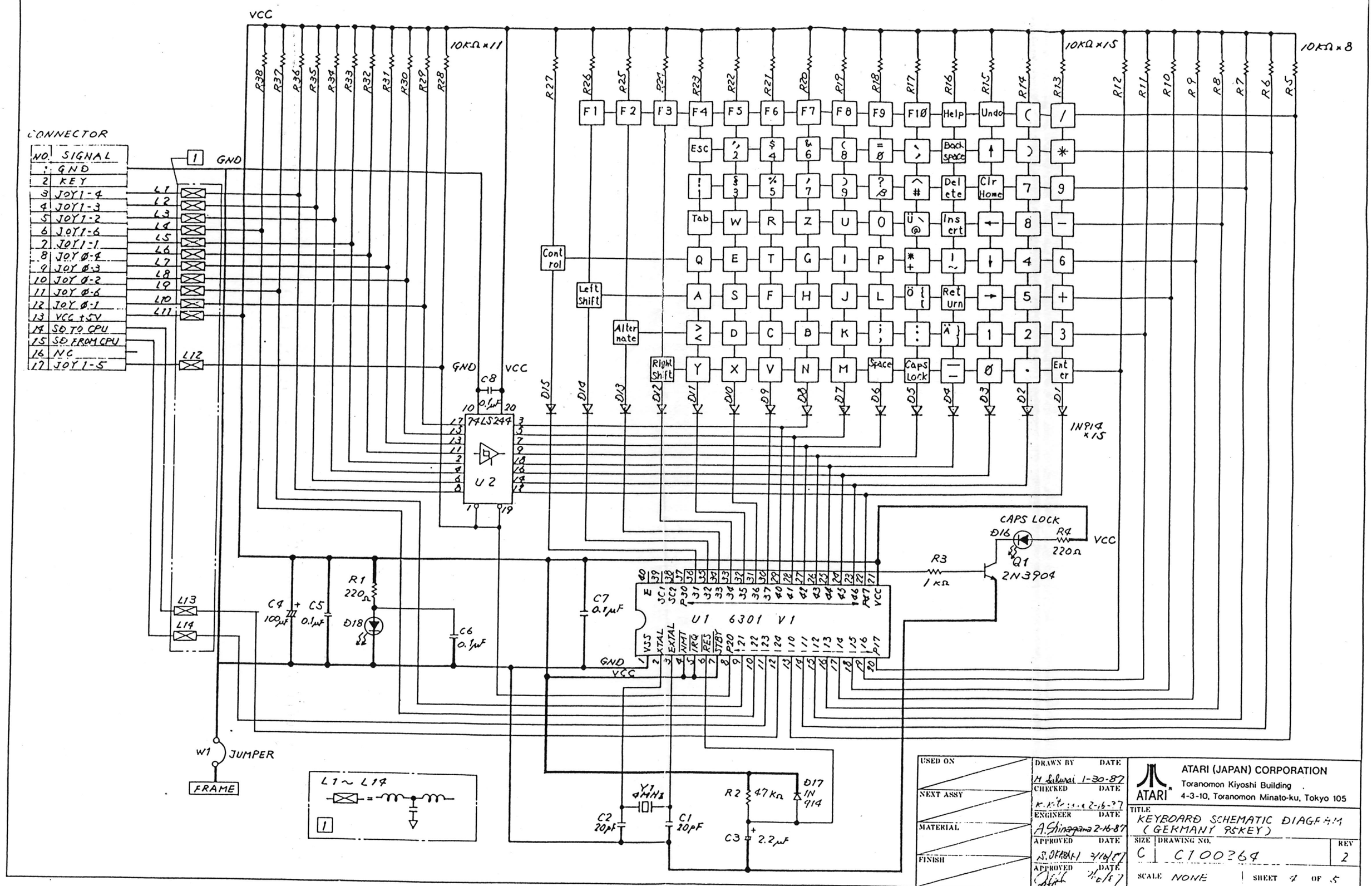

USED ON	DRAWN BY	DATE
NEXT ASSY	H. Sakurai	1-30-87
MATERIAL	CHECKED	DATE
FINISH	ENGINEER A. Shinagawa	DATE 2-16-87
	APPROVED S. OKABAYI	DATE 3/16/87
	APPROVED	DATE 3/16/87

ATARI (JAPAN) CORPORATION
Toranomon Kiyoshi Building
4-3-10, Toranomon Minato-ku, Tokyo 105

TITLE: KEYBOARD SCHEMATIC DIAGRAM (GERMANY 95KEY)

SIZE	DRAWING NO.	REV
C	C100364	2

SCALE NONE | SHEET 4 OF 5

THIRD ANGLE SYSTEM DIMENSION mm

A/N: CA200055-XXX	REV. 5	TITLE: PCB SUB ASSY	MODEL: MEGAST 4

REV	REVISION DESCRIPTION	DATE	APPROVED
	SEE SHEET 1.		

ATARI®

ATARI (JAPAN) CORPORATION
Toranomon Kiyoshi Building 3F
4-3-10, Toranomon Minato-ku, Tokyo 105

VERSION	STANDARD	MARKET

A/N: CA200055-XXX

SHEET 6 OF 26

ITEM NO.	PART NUMBER	DESCRIPTION	QTY. REQUIRED PER VERSION -001	-002	-003	-101	-102	-103					NOTE
193													
194													
195													
196													
197													
198													
199	34-2N3904	TRANSISTOR; 2N3904	6	6	6	6	6	6					
200		Q1,3,6~9											
201	34-2N3904	TRANSISTOR; 2N3904	1	1	1	1	1	1					
202		Q10											
203													
204													
205	33-2N3906	TRANSISTOR; 2N3906	1	1	1	1	1	1					
206		Q2											
207													
208													
209													
210													
211													
212													
213	C025993	CRYSTAL ; 2.4576 MHz	1	1	1	1	1	1					
214		Y1											
215	C100232	CRYSTAL ; 32.768 KHz	1	1	1	1	1	1					
216		Y2											
217	C100281	CRYSTAL MODULE ; 32.04245 MHz	1	1	1	1	1	1					
218		OSC1.											
219													
220													
221													
222													
223	C101643	IC ; ST BLITTER , CUSTOM	1	1	1	1	1	1					
224		U5											
225	C025982	IC ; 68000-8 , CPU	1	1	1	1	1	1					
226		U8											
227	C025913	IC; DMA CONTROLLER, CUSTOM	1	1	1	1	1	1					
228		U27											
229	C025915	IC; GLUE, CUSTOM	1	1	1	1	1	1					
230		U17											
231	C101608	IC; FULL CUSTOM SHIFTER(WITH D-A)	1	1	1	1	1	1					
232		U31											
233	C025912	IC; MCU, CUSTOM	1	1	1	1	1	1					
234		U30											
235	C025983	IC; YM2149, SOUND	1	1	1	1	1	1					
236		U16											
237	C025985	IC ; 6850, ACIA	2	2	2	2	2	2					
238		U14, 15											
239	C025984	IC; 68901, MFP	1	1	1	1	1	1					
240		U18											

5

A/N: CA200055 - XXX	REV. 5	TITLE: PCB SUB ASSY	MODEL: MEGAST 4

REV	REVISION DESCRIPTION	DATE	APPROVED
	SEE SHEET 1.		

ATARI®

ATARI (JAPAN) CORPORATION
Toranomon Kiyoshi Building 3F
4-3-10, Toranomon Minato-ku, Tokyo 105

VERSION	STANDARD	MARKET

A/N: CA200055-XXX

SHEET 7 OF 26

ITEM NO.	PART NUMBER	DESCRIPTION	QTY. REQUIRED PER VERSION -001	-002	-003	-101	-102	-103					NOTE
241	C025986	IC ; 1488, RS-232C, DRIVER	1	1	1	1	1	1					
242		U19											
243	C025987	IC ; 1489, RS-232C, RECEIVER	1	1	1	1	1	1					
244		U20											
245	C026028	IC; WD1772, FDD CONTROLLER	1	1	1	1	1	1					
246		U28											
247	C101621	IC; TL 7705A	1	1	1	1	1	1					
248		U1											
249	C025988	IC ; PC900, PHOTO COUPLER	1	1	1	1	1	1					
250		U13											
251	C070447	IC ; TL497A, SWITCHING REGULATOR	1	1	1	1	1	1					
252		U22											
253	C101614-000	IC ; 74HC 00 QUAD NAND GATE	1	1	1	1	1	1					
254		U24											
255	C101622	IC ; RP5C15 REAL TIME CLOCK	1	1	1	1	1	1					
256		U25											
257	C101624-1XX	IC ; DYNAMIC RAM 1Mx1 (120 ns)	32	32	32	32	32	32					
258		U40~55 , 60~75											
259	C101625	IC ; RTCPAL , PAL16 L8	1	1	1	1	1	1					
260		U37											
261	C014340	IC ; 74LS02 , QUAD NOR	1	1	1	1	1	1					
262		U21											
263	C070210	IC ; 7406 , HEX INVERTER O.C	1	1	1	1	1	1					
264		U26											
265	C062080	IC ; 7407 , HEX, O.C. BUFFER	1	1	1	1	1	1					
266		U2											
267	C014362	IC ; 74LS32, QUAD 2-INPUT OR GATE	1	1	1	1	1	1					
268		U78											
269	C101611-148	IC ; 74LS148, 8 TO 3 PRIORITY ENCODER	1	1	1	1	1	1					
270		U39											
271	C014313	IC ; 74LS244, 3-STATE LINE BUFFER	4	4	4	4	4	4					
272		U32, 35 , 58, 59											
273	C025992	IC ; 74LS373 , LATCH	2	2	2	2	2	2					
274		U33, 36											
275	C070857	IC ; 74LS11, TRIPLE 3-INPUT AND GATE	1	1	1	–	–	–					
276		U12											
277													
278													
279													
280													
281													
282													
283	C070129	CONN ; 40PIN, RIGHT ANGLE	1	1	1	1	1	1					
284		J2											
285	C070130-002	CONN ; DB-19S, HARD DISK	1	1	1	1	1	1					
286		J10 (HOOK TYPE)											
287	C070131	CONN ; 14 PIN, DIN, FLOPPY DISK	1	1	1	1	1	1					
288		J13											

A/N: CA200055-XXX	REV. 5	TITLE: PCB SUB ASSY	MODEL: MEGAST 4

REV	REVISION DESCRIPTION	DATE	APPROVED
	SEE SHEET 1.		

ATARI

ATARI (JAPAN) CORPORATION
Toranomon Kiyoshi Building 3F
4-3-10, Toranomon Minato-ku, Tokyo 105

VERSION	STANDARD	MARKET

A/N: CA200055-XXX

SHEET 8 OF 26

ITEM NO.	PART NUMBER	DESCRIPTION	QTY. REQUIRED PER VERSION -001	-002	-003	-101	-102	-103					NOTE
289	C070134	CONN; 13PIN, DIN, VIDEO	1	1	1	1	1	1					
290		J14											
291	C070033	CONN; 5PIN, DIN, MIDI	2	2	2	2	2	2					
292		J3, 4											
293	C070132-002	CONN; DB-25P, RS232C	1	1	1	1	1	1					
294		J7 (HOOK TYPE)											
295	C070133-002	CONN; DB-25S, PARALELL	1	1	1	1	1	1					
296		J6 (HOOK TYPE)											
297	C100292-003	CONN; RIGHT ANGLE MODULAR JACK	1	1	1	1	1	1					
298		J5 6 CIRCUIT											
299	C070445	SINGLE INLINE CONNECTOR 6PIN	2	2	2	2	2	2					
300		J1, 18											
301	C070644-011	DOUBLE INLINE CONNECTOR 24PIN	1	1	1	1	1	1					
302		J17											
303	C100283-001	DOUBLE INLINE CONNECTOR MALE TYPE, 64PIN	1	1	1	1	1	1					
304		J15											
305													
306													
307													
308													
309	C070119	PUSH SWITCH	1	1	1	1	1	1					
310		S1											
311	CA070072	PUSH SWITCH ASSY	ALT	ALT	ALT	ALT	ALT	ALT					
312		(ALTERNATE FOR ITEM 309)											
313													
314													
315													
316													
317	C014386-09	SOCKET; 40PIN	2	2	2	2	2	2					
318		(FOR U27, 31)											
319	C014386-08	SOCKET; 28PIN	6	6	6	6	6	6					
320		(FOR U3, 4, 6, 7, 9, 10)											
321	C070120	SOCKET; 68PIN PLCC	3	3	3	3	3	3					
322		(FOR U5, 17, 30)											
323													
324													
325													
326													
327	C070718	PLCC STOPPER	3	3	3	3	3	3					
328		(FOR U5, 17, 30)											
329													
330													
331	C100033	BANDAGE PLATE	1	1	1	1	1	1					
332													
333													
334													
335													
336													

7

A/N: CA200055-XXX | REV. 5 | TITLE: PCB SUB ASSY | MODEL: MEGAST 4

REV	REVISION DESCRIPTION	DATE	APPROVED
	SEE SHEET 1.		

ATARI®

ATARI (JAPAN) CORPORATION
Toranomon Kiyoshi Building 3F
4-3-10, Toranomon Minato-ku, Tokyo 105

VERSION	STANDARD	MARKET

A/N: CA200055-XXX

SHEET 8 OF 26

ITEM NO.	PART NUMBER	DESCRIPTION	QTY. REQUIRED PER VERSION -001	-002	-003	-101	-102	-103					NOTE
337	CA200053-002	CABLE ASSY: MALE TYPE 2PIN	1	1	1	1	1	1					
338		J9 (RED & BLACK)											
339	CA070024	FLAT CABLE 34P ASSEMBLED	1	1	1	1	1	1					
340		J12											
341	CA070023-003	CABLE 4P ASSEMBLED	1	1	1	1	1	1					
342		J11											
343													
344													
345													
346													
347													
348													
349													
350													
351													
352													
353													
354													
355													
356													
357													
358													
359													
360													
361													
362													
363													
364													
365													
366													
367													
368													
369													
370													
371													
372													
373													
374													
375													
376													
377													
378													
379													
380													
381													
382													
383													
384													

8

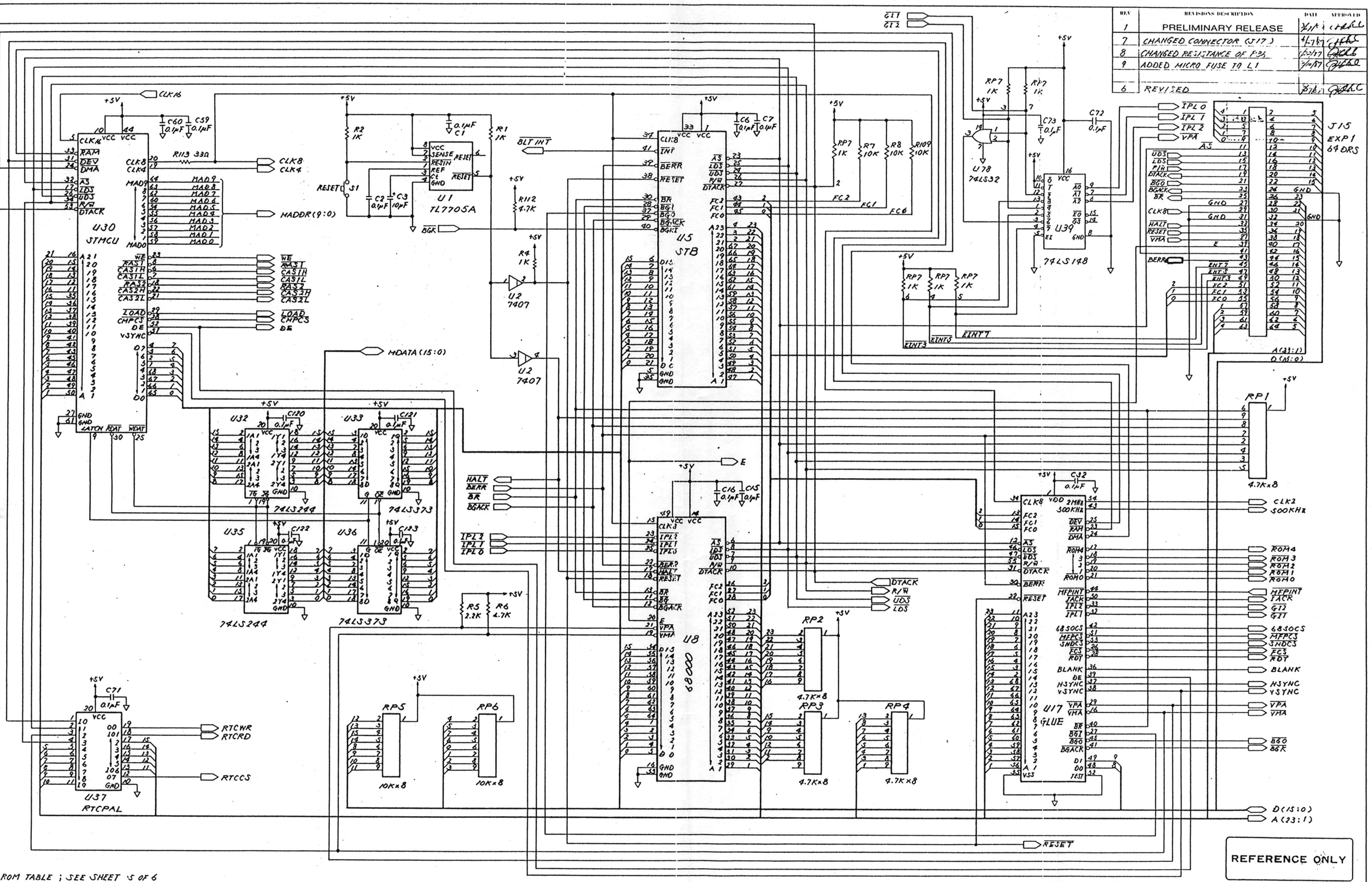

REV	REVISIONS DESCRIPTION	DATE	APPROVED
1	PRELIMINARY RELEASE	3/1/	
7	CHANGED CONNECTOR (J17)	4/1/87	
8	CHANGED RESISTANCE OF F34	4/21/87	
9	ADDED MICRO FUSE TO L1	7/14/87	
6	REVISED	3/16/	

5 ROM TABLE ; SEE SHEET 5 OF 6
NOT REQUIRED FOR ASSY NO. CA200055-XX1.

3. PUT JUMPER WIRE FROM (a) TO (b) (IN DETAIL 'A' L2~4, 6~8, 13~22, 24~30, 32~43)
ASSY NO. CA200055-XX2.

2. NOISE FILTER : SEE DETAIL 1.

1. RESISTORS ARE MEASURED IN OHMS, 5%, 1/4 WATT.

NOTES-UNLESS OTHERWISE SPECIFIED :

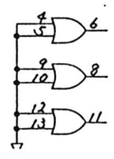

REFERENCE ONLY

USED ON: MEGA ST 4	DRAWN BY: H. Kawamoto DATE: 7-18-86	ATARI (JAPAN) CORPORATION
NEXT ASSY: CA200055-XXX	CHECKED: DATE: 2-16-87	Toranomon Kiyoshi Building 3F
MATERIAL	ENGINEER: DATE: 3-27-87	4-3-10, Toranomon Minato-ku Tokyo 105
FINISH	APPROVED: DATE: 4/27/87	TITLE: SCHEMATIC DIAGRAM (MEGA ST 4)
	APPROVED: DATE	SIZE: D DRAWING NO.: C100166 REV: 9

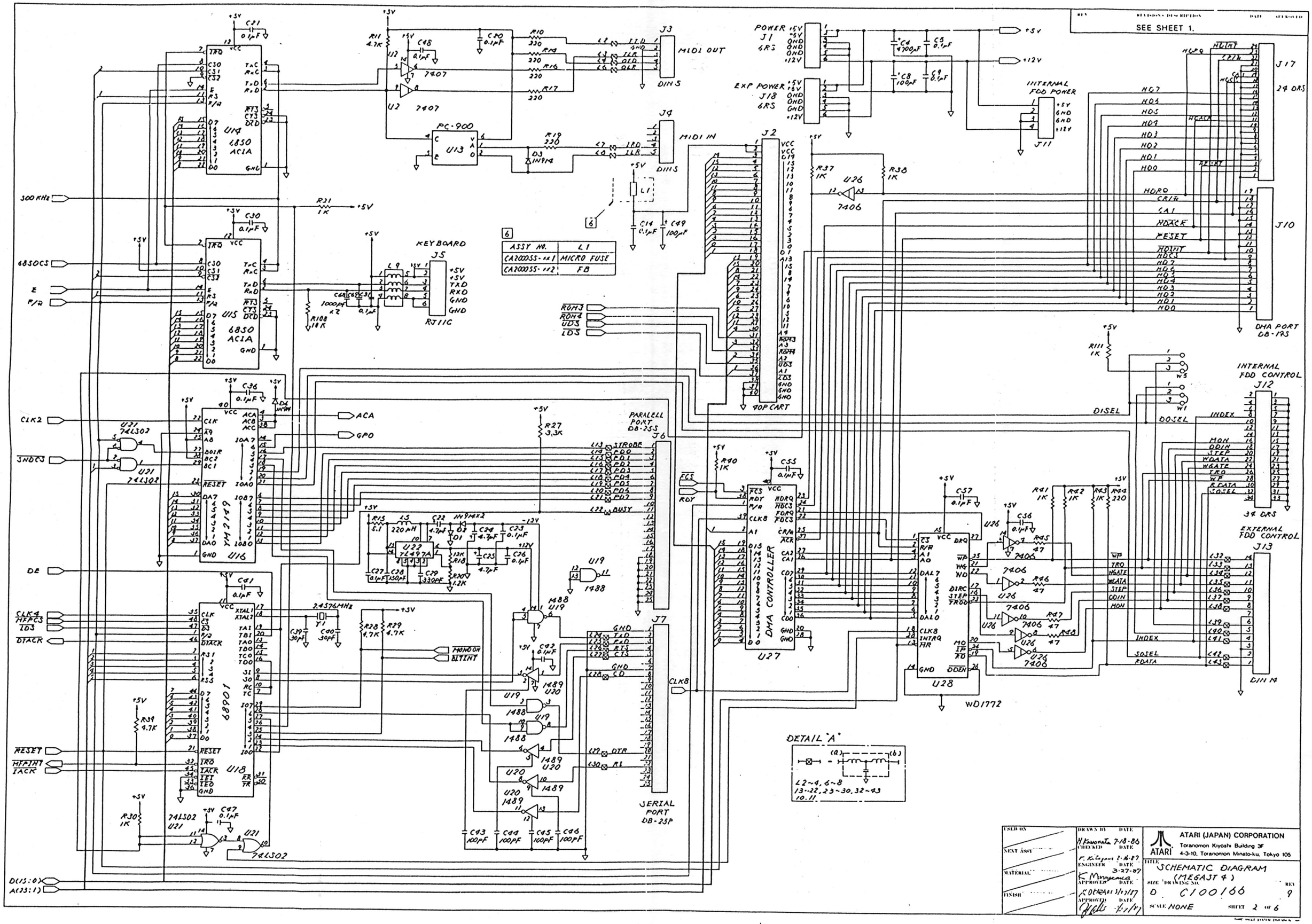
SEE SHEET 1.
U14 6850 ACIA
U15 6850 ACIA
U16 YM2149
U18 68901
U22 74497A
U27 DMA CONTROLLER
U28 WD1772
PC-900 U13
7407 U2
7406 U26
74LS02 U21
1488 U19
1489 U20
MIDI OUT J3 DIN5
MIDI IN J4 DIN5
POWER J1 6RS
EXP POWER J18 6RS
INTERNAL FDD POWER J11
J17 24 DRS
J10 DMA PORT DB-19S
KEYBOARD J5 RJ11C
J2 40P CART
PARALELL PORT DB-25S J6
SERIAL PORT DB-25P J7
INTERNAL FDD CONTROL J12 34 DRS
EXTERNAL FDD CONTROL J13 DIN 14
DETAIL "A"
L2~4, 6~8
13~22, 23~30, 32~43
10, 11.
ATARI (JAPAN) CORPORATION
Toranomon Kiyoshi Building 3F
4-3-10, Toranomon Minato-ku, Tokyo 105
SCHEMATIC DIAGRAM
(MEGAST 4)
D C100166
SCALE NONE
SHEET 2 OF 6

10

REV	REVISIONS DESCRIPTION	DATE	APPROVED
	SEE SHEET 1.		

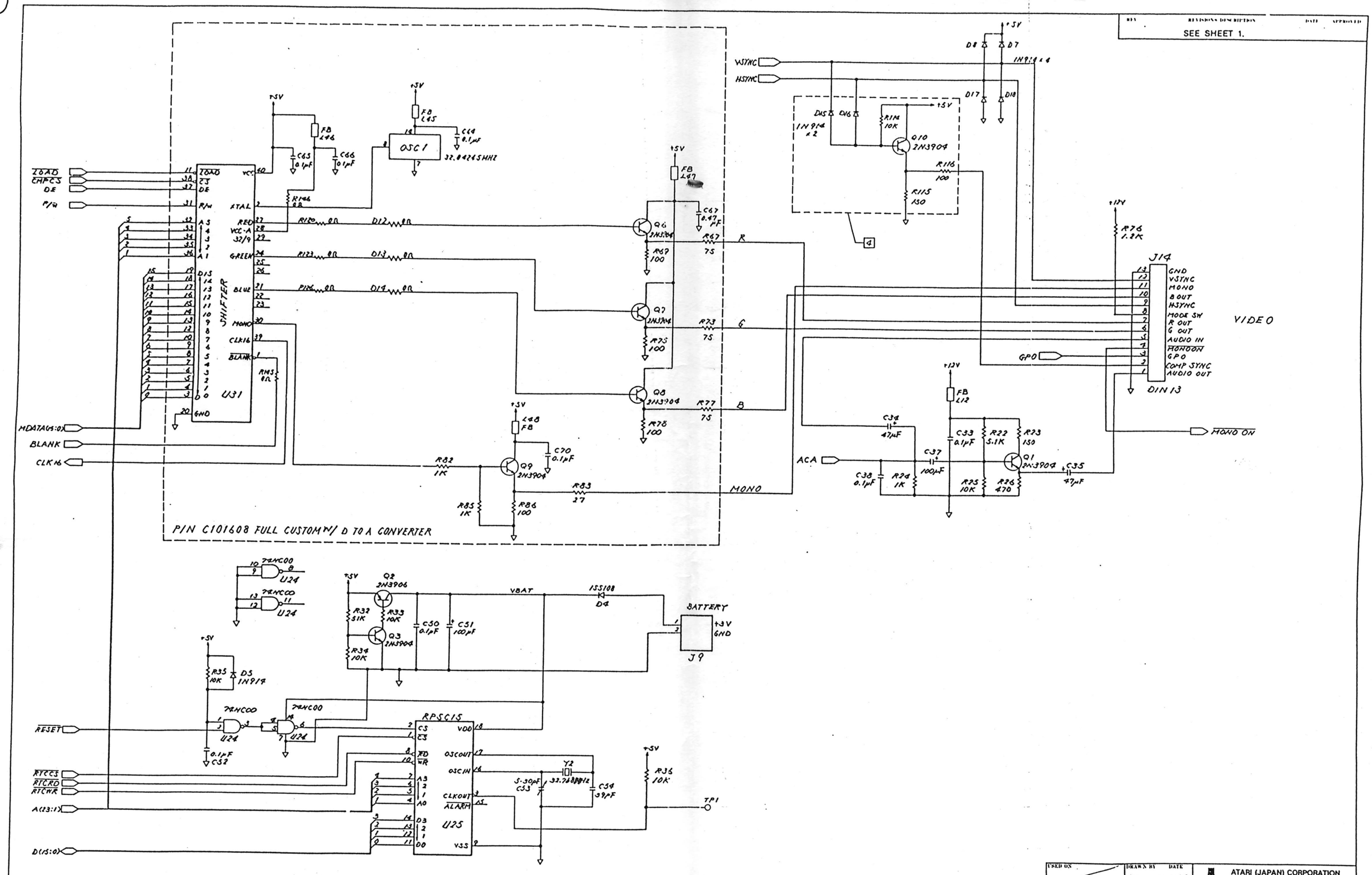

USED ON	DRAWN BY	DATE	ATARI (JAPAN) CORPORATION
NEXT ASSY	H. Kawamoto	2-18-86	Toranomon Kiyoshi Building 3F
	CHECKED K. Kitagawa	DATE 2-16-87	4-3-10, Toranomon Minato-ku, Tokyo 105
MATERIAL	ENGINEER K. Morizumi	DATE 3-27-87	TITLE SCHEMATIC DIAGRAM (MEGAST 9)
FINISH	APPROVED S. OKADA	DATE 3/27/87	SIZE D · DRAWING NO. C100166 · REV 9
	APPROVED	DATE 3/27/87	SCALE NONE · SHEET 3 OF 6

THIRD ANGLE SYSTEM DIMENSION mm

REV	REVISIONS DESCRIPTION	DATE	APPROVED
	SEE SHEET 1.		

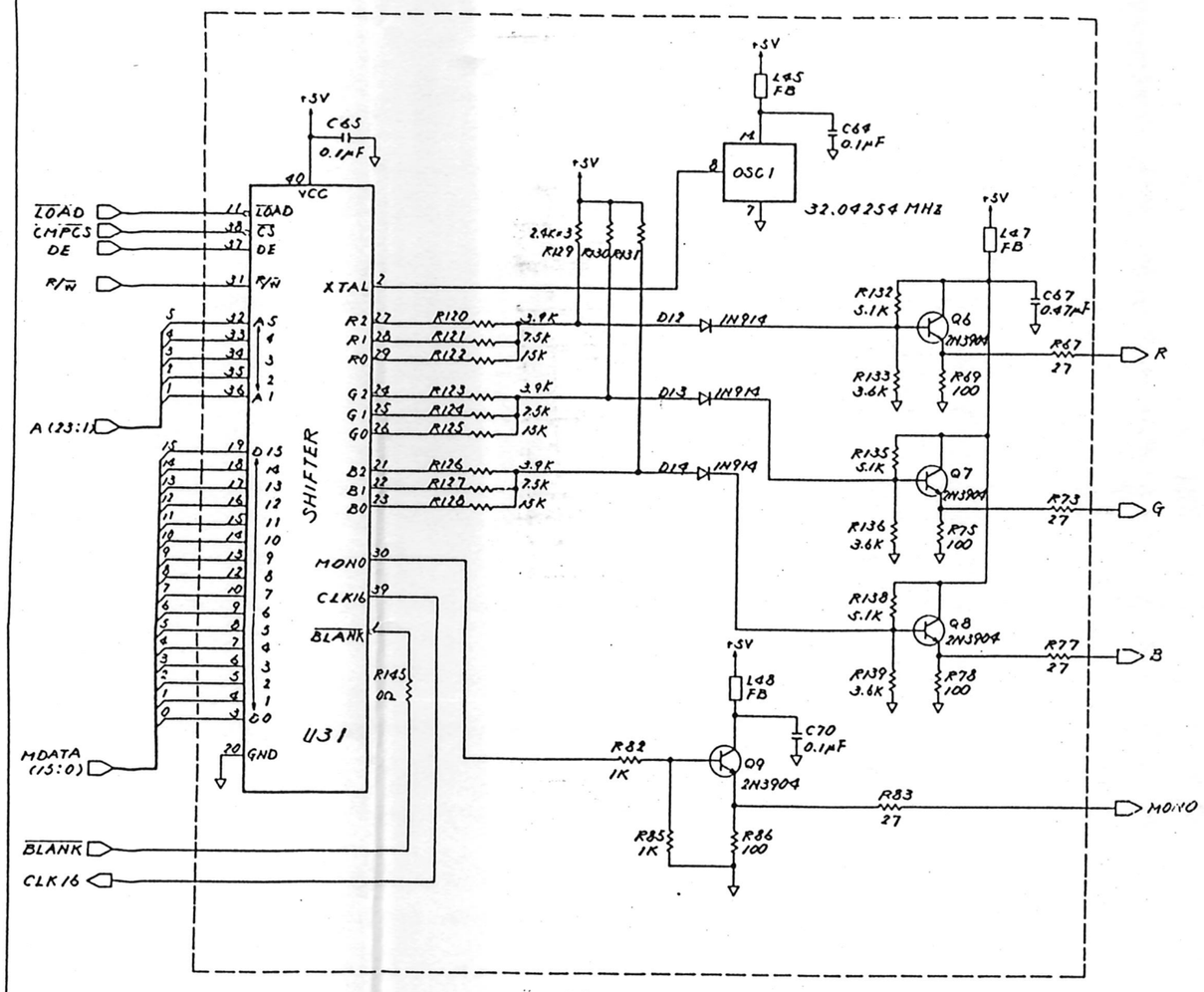

P/N C070713 FULL CUSTOM W/O D TO A CONVERTER

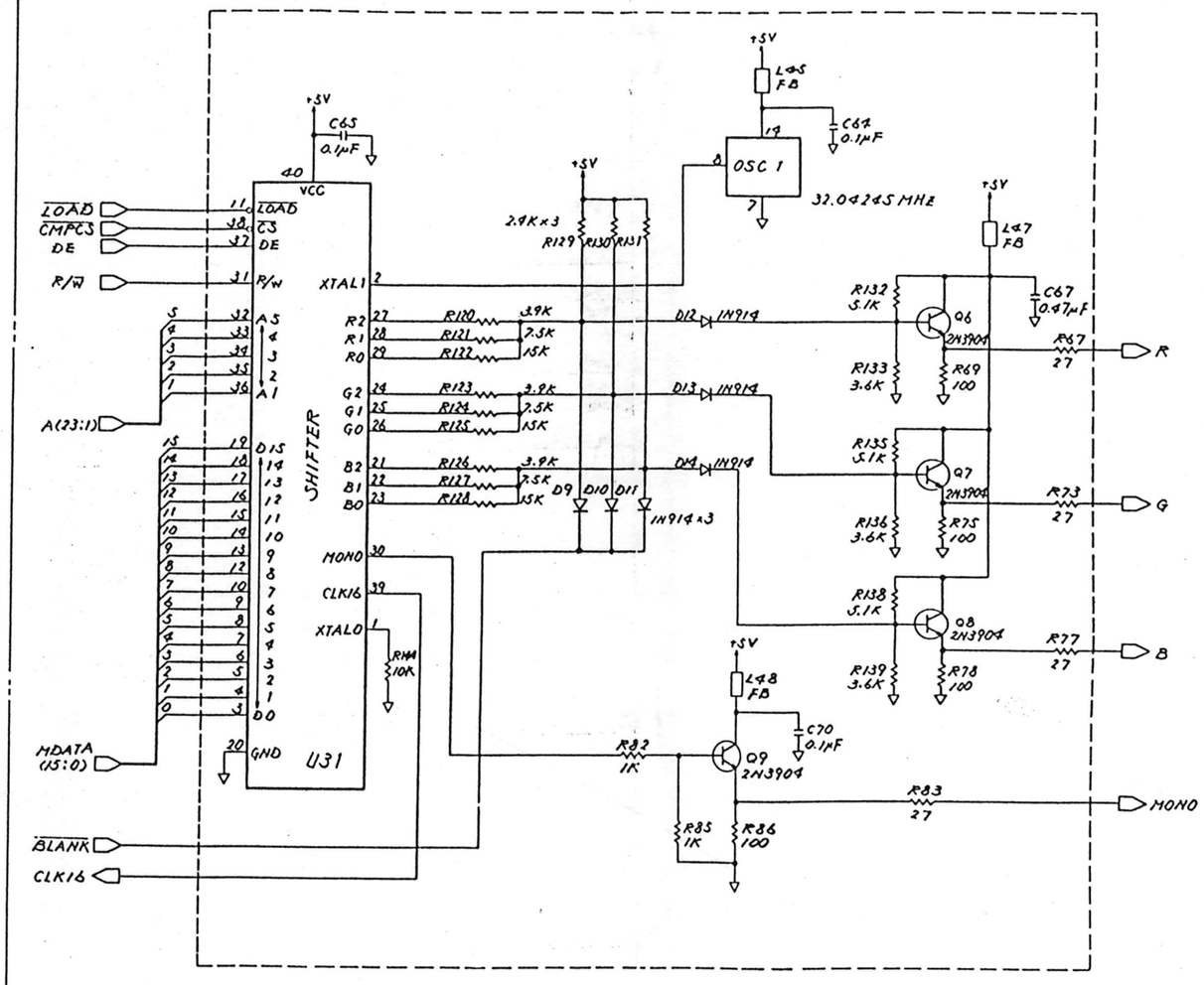

P/N C025914 GATE ARRAY W/O D TO A CONVERTER

USED ON	DRAWN BY	DATE	ATARI (JAPAN) CORPORATION
NEXT ASSY	H. Kawamata	3-5-87	Toranomon Kiyoshi Building 3F, 4-3-10, Toranomon Minato-ku, Tokyo 105
MATERIAL	CHECKED / ENGINEER	DATE	TITLE: SCHEMATIC DIAGRAM (MEGAST 4)
FINISH	APPROVED	DATE	SIZE D · DRAWING NO. C100166 · REV 9
	APPROVED	DATE	SCALE NONE · SHEET 4 OF 6

REV	REVISIONS DESCRIPTION	DATE	APPROVED
	SEE SHEET 1.		

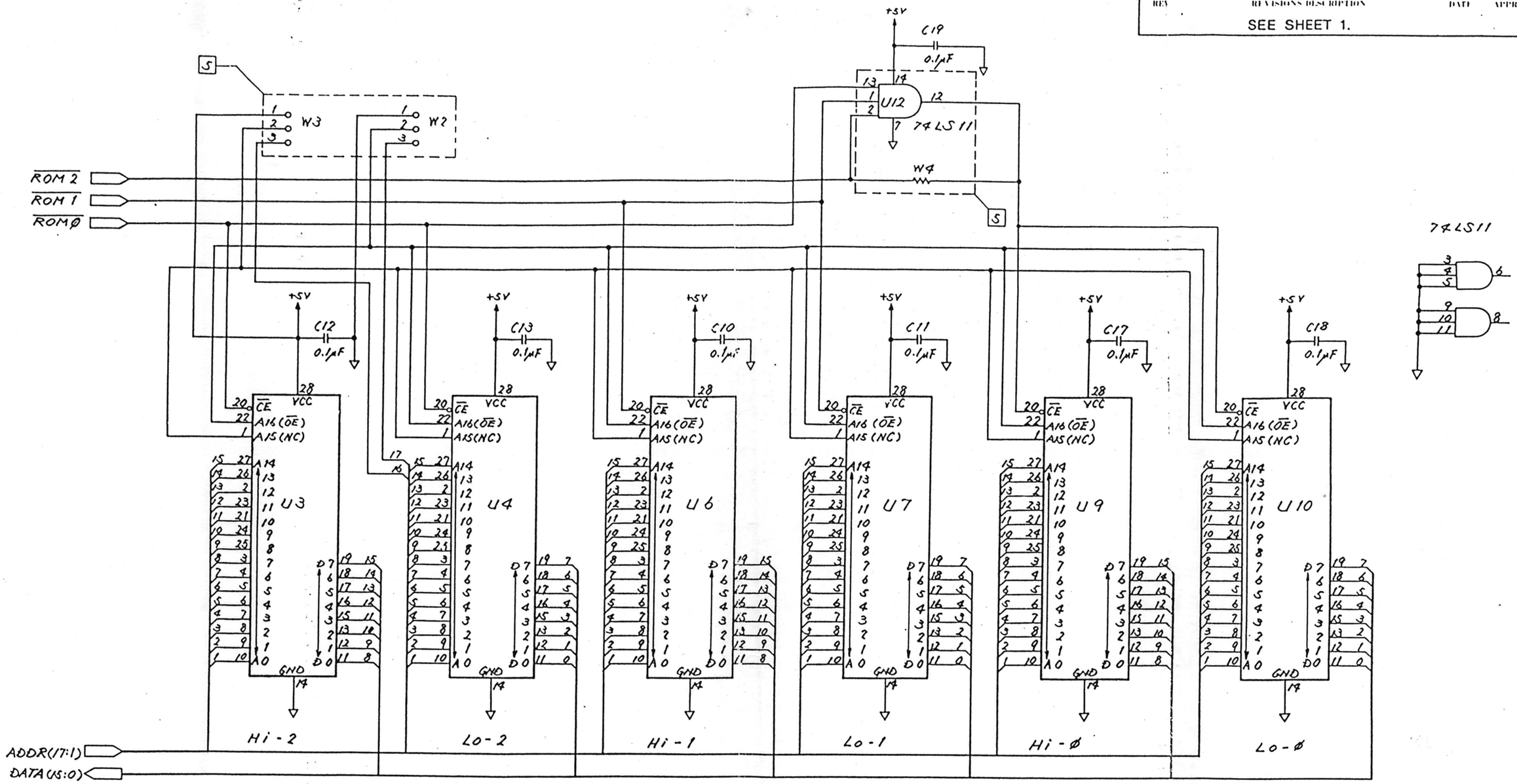

5 ROM TABLE

IC ; U12 (74LS11)
JUMPER ; W2, W3, W4

ROM	LOCATION			
	W2	W3	W4	U12
256K	1 - 2	1 - 2	JUMPER	NO USE
1M x 2	2 - 3	2 - 3	NON	USE
1M x 6	2 - 3	2 - 3	JUMPER	NO USE

NOTES - UNLESS OTHERWISE SPECIFIED :

USED ON	DRAWN BY	DATE	ATARI (JAPAN) CORPORATION
	N. Hanamura	11-27-86	Toranomon Kiyoshi Building 3F
NEXT ASSY	CHECKED	DATE	4-3-10, Toranomon Minato-ku, Tokyo 105
	K. Kitagawa	2-16-87	TITLE SCHEMATIC DIAGRAM (MEGAST 4)
MATERIAL	ENGINEER	DATE	
	K. Maruyama	3-27-87	
FINISH	APPROVED	DATE	SIZE C / DRAWING NO. C100166 / REV 9
	S. OKAZAKI	3/27/87	
	APPROVED	DATE	SCALE NONE / SHEET 5 OF 6
		3/27/87	

THIRD ANGLE SYSTEM DIMENSION mm

13

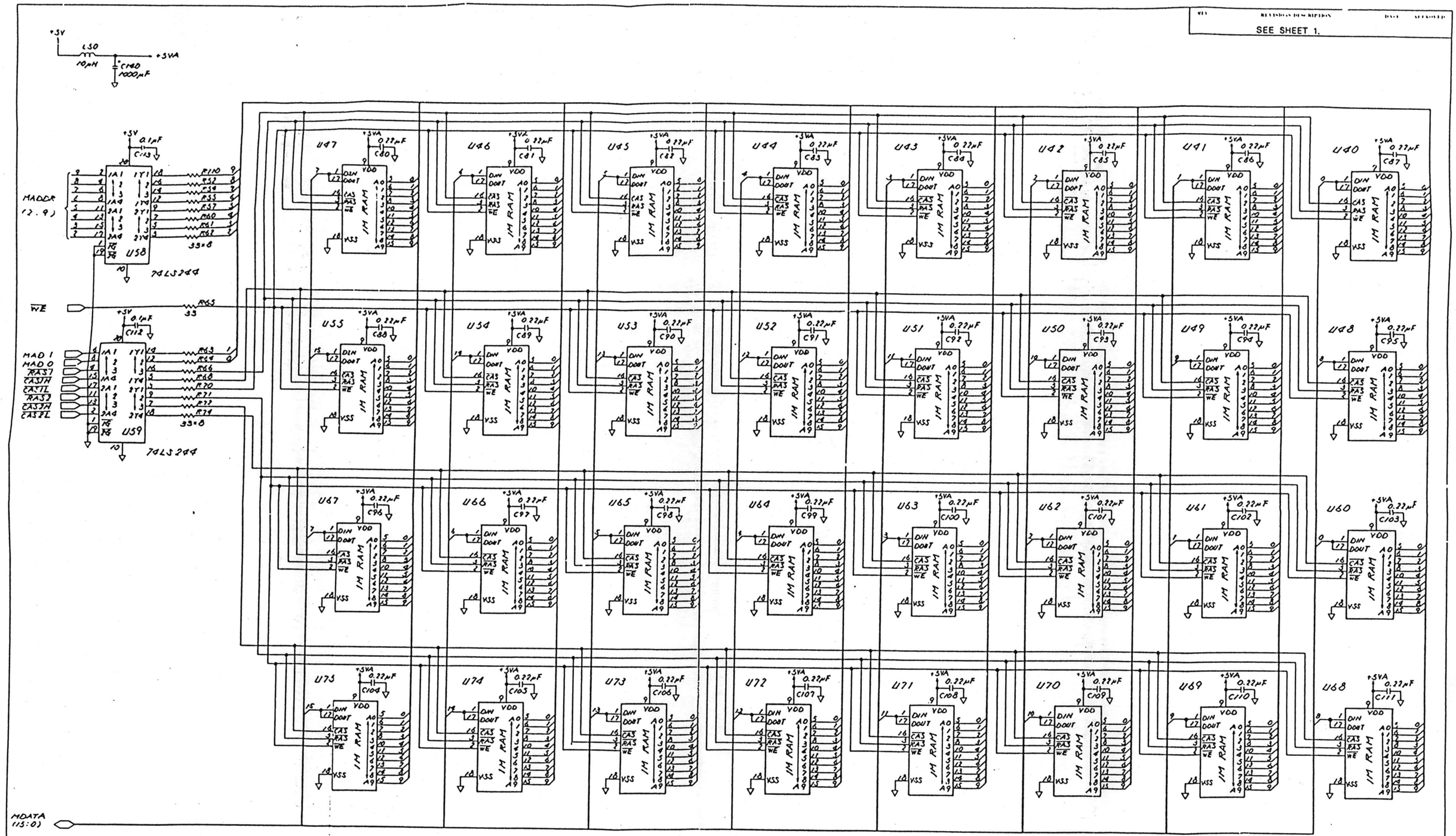

REV	REVISION DESCRIPTION	DATE	APPROVED
	SEE SHEET 1.		

USED ON

NEXT ASSY

MATERIAL

FINISH

DRAWN BY: H Tanamata DATE: 11-28-86
CHECKED: K. Ogawa DATE: 7-16-87
ENGINEER: K Matsumoto DATE: 3-27-87
APPROVED: DATE: 3/27/87
APPROVED: DATE: 3/27/87

ATARI (JAPAN) CORPORATION
Toranomon Kiyoshi Building 3F
4-3-10, Toranomon Minato-ku, Tokyo 105

TITLE: SCHEMATIC DIAGRAM (MEGAST 4)

SIZE: D | DRAWING NO: C100166 | REV: 9

SCALE: NONE | SHEET 6 OF 6

N1

ASSY NO.	DESCRIPTION
CA200001 -001	120V FOR ST (ASP34-1)(ASPF34-1)
-002	220V FOR ST (ASP34-2)(ASPF34-2)
-003	120V FOR SH204 (ASP34-3)
-004	220V FOR SH204 (ASP34-4)
-005	120V FOR SH205 (ASPF34-3)
CA200001 -006	220V FOR SH205 (ASPF34-4)

REV.	REVISIONS DESCRIPTION	DATE	APPROVED
A	PRODUCTION RELEASE	2/20/87	
B	REVISED PER ECO NO. 00447	7/23/87	

NOTES-UNLESS OTHERWISE SPECIFIED :

USED ON
ASP34-X
ASPF34-X
NEXT ASSY
CA200000-XXX
/CA200003-XXX
MATERIAL
FINISH

DRAWN BY H. Kawamata DATE 8-11-86
CHECKED K. Kitagawa DATE 9-4-86
ENGINEER A. Shinagawa DATE 1-21-87
APPROVED J. OKAZAKI DATE 1/21/87
APPROVED DATE 2/20/87

ATARI

ATARI (JAPAN) CORPORATION
Toranomon Kiyoshi Building 3F
4-3-10, Toranomon Minato-ku, Tokyo 105

TITLE PCB ASSY
SIZE B
DRAWING NO. CA200001-XXX
REV B
SCALE
SHEET 1 OF 7

THIRD ANGLE SYSTEM DIMENSION - m

N2

A/N: CA200001-XXX	REV. B	TITLE: PCB ASSY	MODEL: ASP34-1/-2/-3/-4 ASPF34-1/-2/-3/-4

REV	REVISION DESCRIPTION	DATE	APPROVED
	SEE SHEET 1.		

ATARI

ATARI (JAPAN) CORPORATION
Toranomon Kiyoshi Building 3F
4-3-10, Toranomon Minato-ku, Tokyo 105

VERSION	STANDARD	MARKET

A/N: CA200001-XXX

SHEET 2 OF 7

ITEM NO.	PART NUMBER	DESCRIPTION	QTY. REQUIRED PER VERSION -001	-002	-003	-004	-005	-006	NOTE
1	C070798	SCHEMATIC DIAGRAM	REF	-	-	-	-	-	
2	C100114	↑	-	REF	-	-	-	-	
3	C100115	↓	-	-	REF	-	REF	-	
4	C100116	SCHEMATIC DIAGRAM	-	-	-	REF	-	REF	
5									
6	C070799	PCB FABRICATION	REF	REF	REF	REF	REF	REF	
7									
8									
9	C070800-001	PCB (SINGLE SIDE) UL. CSA	1	-	1	-	1	-	
10	C100000-001	PCB (SINGLE SIDE) BSI. VDE	-	1	-	1	-	1	
11									
12									
13									
14									
15									
16	C070824-002	CAP; 0.22μF, 250V, RFI, FILTER	1	-	1	-	1	-	
17		C1							
18	C070823-001	CAP; 0.002μF, 400V, CER,	1	1	1	1	1	1	
19		C2							
20	C070824-001	CAP; 0.01μF, 250V, RFI, FILTER	1	1	1	1	1	1	
21		C3							
22	C070825-001	CAP; 0.022μF, 50V, ±10%, MYLA	1	1	1	1	1	1	
23		C10							
24	C070824-003	CAP; 1μF, 250V, RFI, FILTER	-	1	-	1	-	1	
25		C1							
26	C070824-002	CAP; 0.22μF, 250V, RFI, FILTER	1	1	1	1	1	1	
27		C16							
28	C070825-002	CAP; 0.22μF, 50V, ±10%, MYLA	1	1	1	1	1	1	
29		C11							
30	C070826-001	CAP; 1μF, 16V, TATALUM	1	1	1	1	1	1	
31		C8							
32	C070834-008	CAP; 47μF, 250V, ELEC	2	2	-	-	-	-	
33		C4, 5							
34	C100112-009	CAP; 100μF, 200V, ELEC	-	-	2	2	2	2	
35		C4, 5							
36	C101202-472	CAP; 4700μF, 16V, ELEC	1	1	1	1	1	1	
37		C13							
38	C070498-005	CAP; 100μF, 25V, ELEC	1	1	1	1	1	1	
39		C9							
40	C070849-006	CAP; 330μF, 25V, ELEC	3	3	3	3	3	3	
41		C7, 14, 15							
42									
43									
44	C070849-009	CAP; 2200μF, 25V, ELEC	1	1	1	1	1	1	
45		C12							
46	C070827	CAP; 470PF, 1KV, CER	1	1	1	1	1	1	
47		C6							
48									

N 2A

A/N: CA200001-XXX	REV. B	TITLE: PCB ASSY	MODEL: ASP34-1/-2/-3/-4 ASPF34-1/-2/-3/-4

REV	REVISION DESCRIPTION	DATE	APPROVED
	SEE SHEET 1.		

ATARI

ATARI (JAPAN) CORPORATION
Toranomon Kiyoshi Building 3F
4-3-10, Toranomon Minato-ku, Tokyo 105

VERSION	STANDARD	MARKET

A/N: CA200001-XXX

SHEET 3 OF 7

ITEM NO.	PART NUMBER	DESCRIPTION	QTY. REQUIRED PER VERSION -001	-002	-003	-004	-005	-006	NOTE
49									
50									
51									
52									
53									
54									
55									
56									
57									
58									
59									
60									
61									
62									
63									
64	C070828-010	RES; 1Ω, 1W, ±5%, M.F	1	1	1	1	1	1	
65		R8							
66	14-5150	RES; 15Ω, 1/4W, ±5%, C.F	1	1	1	1	1	1	
67		R7							
68	C070829-510	RES; 51Ω, 2W, ±5%, M.F	1	1	1	1	1	1	
69		R5							
70	C070829-680	RES; 68Ω, 2W, ±5%, M.F	1	1	–	–	–	–	
71		R18							
72	14-5121	RES; 120Ω, 1/4W, ±5%, C.F	3	3	3	3	3	3	
73		R9~11							
74	C070830-221	RES; 220Ω, 1/2W, ±5%, C.F	1	1	1	1	1	1	
75		R17							
76	C070829-331	RES; 330Ω, 2W, ±5%, M.F	1	1	1	1	1	1	
77		R4							
78	14-5471	RES; 470Ω, 1/4W, ±5%, C.F	1	1	1	1	1	1	
79		R15							
80	C070830-102	RES, 1KΩ, 1/2W, ±5%, C.F	–	1	1	1	1	1	
81		R16							
82	14-5332	RES, 3.3KΩ, 1/4W, ±5%, C.F	2	2	2	2	2	2	
83		R6, 12							
84	14-5512	RES, 5.1KΩ, 1/4W, ±5%, C.F	–	–	2	2	2	2	
85		R13, 14							
86	C070831-154	RES; 150KΩ, 1/2W, ±5%, M.F	2	2	2	2	2	2	
87		R2, 3							
88	C070830-221	RES; 220Ω, 1/2W, ±5%, C.F	1	–	–	–	–	–	
89		R16							
90									
91									
92									
93									
94									
95									
96									

N3

A/N: CA200001-XXX	REV. B	TITLE: PCB ASSY	MODEL: ASP34-1/-2/-3/-4 ASPF34-1/-2/-3/-4

REV	REVISION DESCRIPTION	DATE	APPROVED
	SEE SHEET 1.		

ATARI

ATARI (JAPAN) CORPORATION
Toranomon Kiyoshi Building 3F
4-3-10, Toranomon Minato-ku, Tokyo 105

VERSION	STANDARD	MARKET

A/N: CA200001-XXX

SHEET 4 OF 7

ITEM NO.	PART NUMBER	DESCRIPTION	QTY. REQUIRED PER VERSION -001	-002	-003	-004	-005	-006	NOTE
97									
98									
99	C070810	PHOTO COUPLER; PC817 (SHARP)	1	-	1	-	1	-	
100		PC1							
101	C070844	PHOTO COUPLER; CNY65	-	1	-	1	-	1	
102		PC1							
103									
104									
105	C070801	INDUCTOR; 1A, OUTPUT FILTER	1	1	1	1	1	1	
106		L2							
107	C070802	INDUCTOR; 3A, OUTPUT FILTER	1	1	1	1	1	1	
108		L1							
109									
110	C070803	LINE FILTER;	1	1	1	1	1	1	
111		T1							
112									
113									
114									
115	C070805	TRANSISTOR; 2SC1384	1	1	1	1	1	1	
116		Q1							
117	C070806	TRANSISTOR; BU508	1	1	1	1	1	1	
118		Q2							
119									
120									
121	C070807-001	THERMISTOR NTC; SD-11	1	1	1	1	1	1	
122		R1							
123	C070807-002	THERMISTOR NTC; NTH 11D 5R OLA	ALT	ALT	ALT	ALT	ALT	ALT	
124		(ALTERNATE FOR ITEM #121)							
125	C070807-003	THERMISTOR NTC;	ALT	ALT	ALT	ALT	ALT	ALT	
126		(ALTERNATE FOR ITEM #121)							
127									
128									
129									
130									
131									
132									
133									
134									
135									
136									
137	C070811	RECTIFIER BRIDGE; GI, W08M	1	1	1	1	1	1	
138		DB1							
139									
140									
141	C070813	SHR; TL431 (TI)	1	1	1	1	1	1	
142		Q3							
143									
144									

N5

A/N: CA200001 - XXX | REV. B | TITLE: PCB ASSY | MODEL: ASP34-1/-2/-3/-4 ASPF34-1/-2/-3/-4

REV	REVISION DESCRIPTION	DATE	APPROVED
	SEE SHEET 1.		

ATARI

ATARI (JAPAN) CORPORATION
Toranomon Kiyoshi Building 3F
4-3-10, Toranomon Minato-ku, Tokyo 105

VERSION	STANDARD	MARKET

A/N: CA200001-XXX

SHEET 8 OF 7

ITEM NO.	PART NUMBER	DESCRIPTION	QTY. REQUIRED PER VERSION -001 -002 -003 -004 -005 -006	NOTE
193				
194				
195	C070812-004	FUSE; 5MF, 2A, 250V, 5x20mm	1 1 1 1 1 1	
196		F1		
197				
198				
199				
200				
201				
202	C070820	TR, CLAMP	1 1 1 1 1 1	
203				
204				
205				
206				
207				
208				
209	C070821	TR, INSULATOR	1 - 1 - 1 -	
210	C070846	TR, INSULATOR	- 1 - 1 - 1	
211				
212				
213				
214				
215	C070837	CAUTION LABEL (RED)	1 1 1 1 1 1	
216				
217				
218				
219				
220				
221				
222				
223				
224				
225				
226				
227				
228				
229				
230				
231				
232				
233				
234				
235				
236				
237				
238				
239				
240				

N6

REV	REVISIONS DESCRIPTION	DATE	APPROVED
	SEE SHEET 1.		

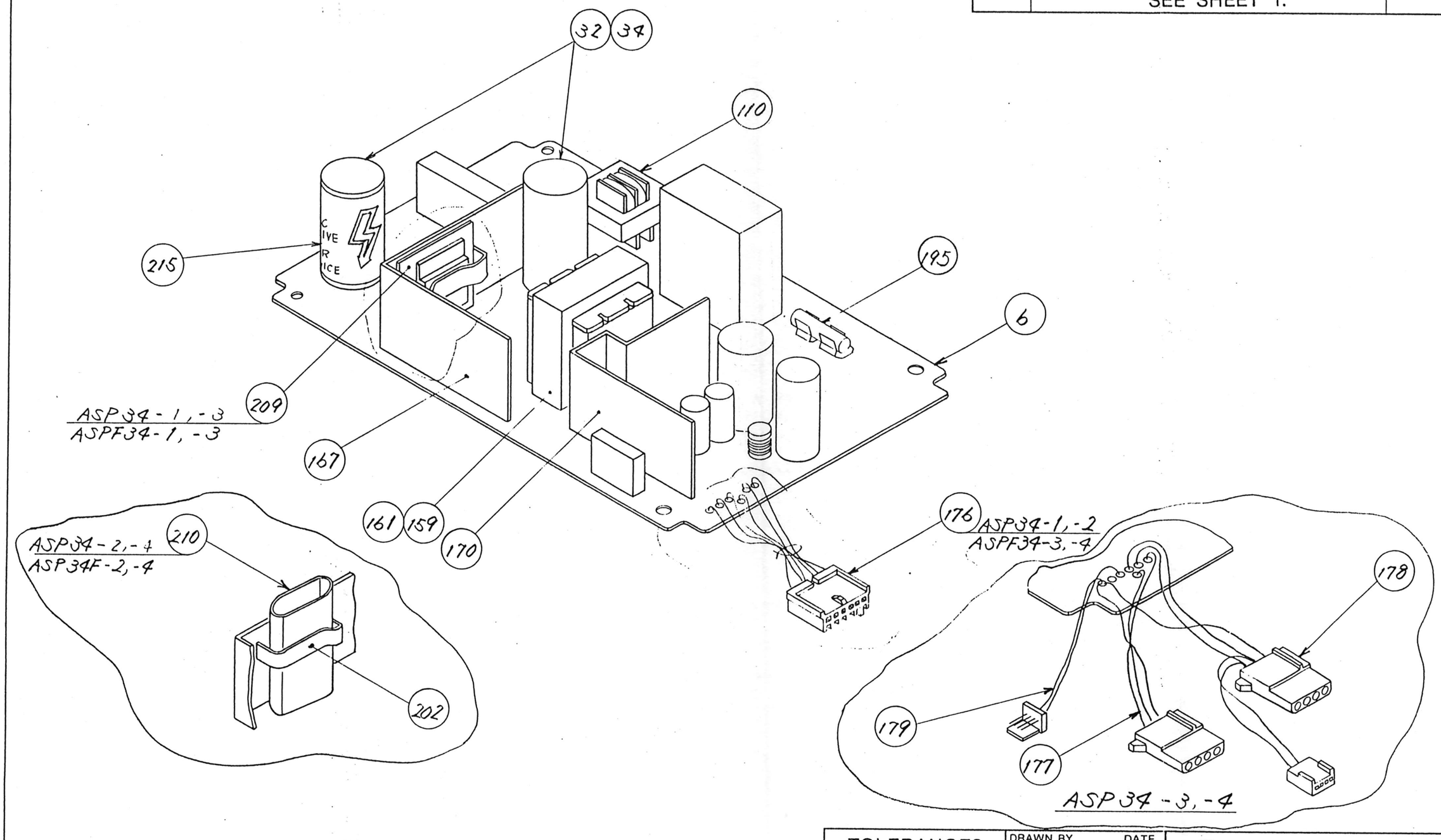

CA200003-xxx	ASP34-31-4
CA200000-xxx	ASP34-X
NEXT ASSY	USED ON

APPLICATION

TOLERANCES	
UNDER 30	±0.1
30 THRU 300	±0.2
OVER 300	±0.4

MATERIAL

FINISH

	DATE
DRAWN BY: H. Kawamata	8-25-86
CHECKED: K. Kitagawa	9-4-86
ENGINEER: A. Shinagawa	2-16-87
APPROVED: S. OKAZAKI	2/17/87
APPROVED: [illegible]	3/20/87

ATARI

ATARI (JAPAN) CORPORATION
Toranomon Kiyoshi Building 3F
4-3-10, Toranomon Minato-ku, Tokyo 105

TITLE: PCB ASSY

SIZE	DRAWING NO.	REV
B	CA200001-xxx	B

SCALE NONE — SHEET 7 OF 7

NOTES—UNLESS OTHERWISE SPECIFIED:

THIRD ANGLE SYSTEM. DIMENSION : mm

N7

REV	REVISIONS DESCRIPTION	DATE	APPROVED
A	PRODUCTION RELEASE	3/20/87	

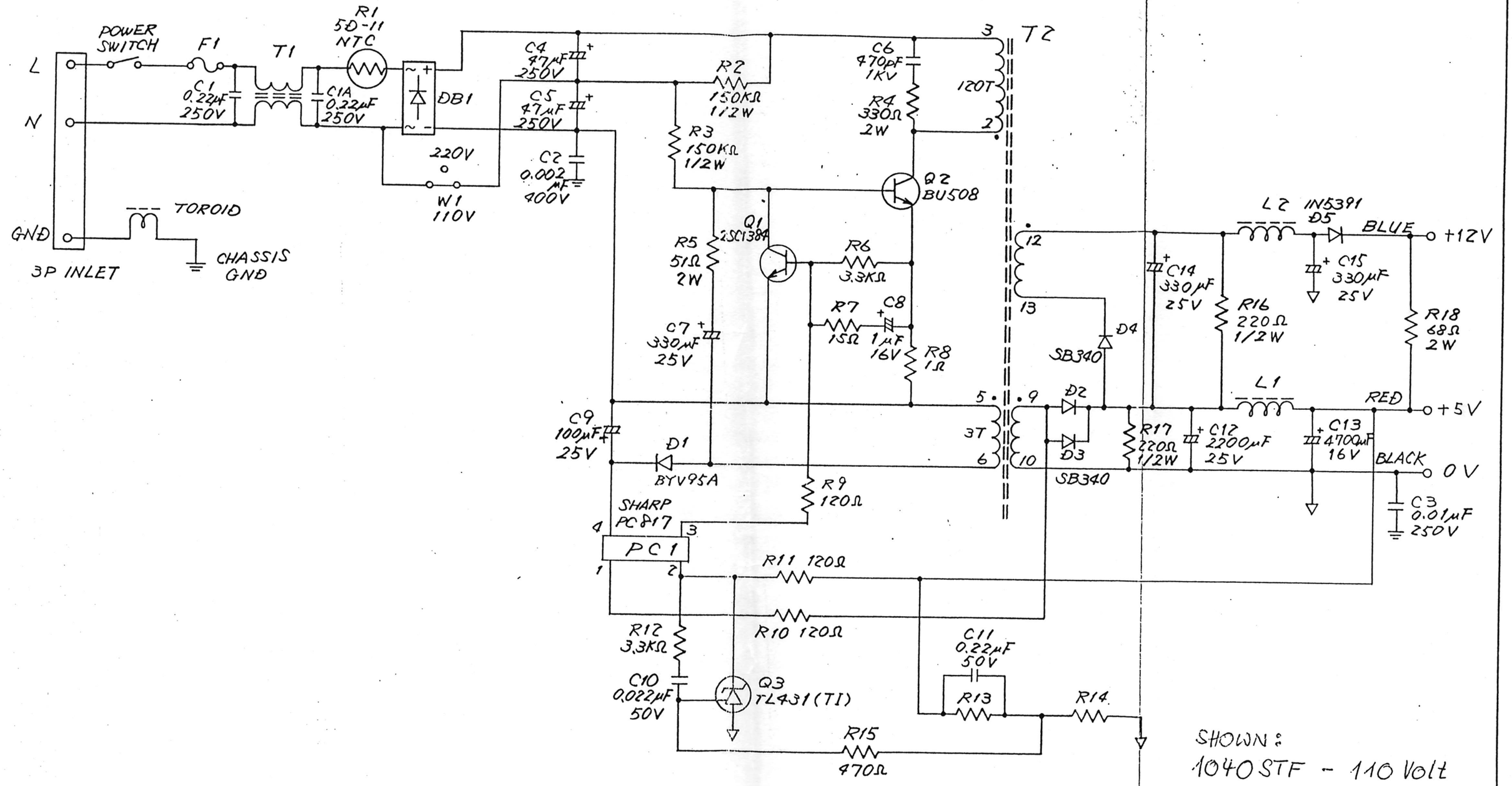

SHOWN:
1040STF - 110 Volt

TOLERANCES	
UNDER 30	±0.1
30 THRU 300	±0.2
OVER 300	±0.4

USED ON: ASP34-1
NEXT ASSY:
MATERIAL:
FINISH:

DRAWN BY: I. Yoshida DATE: 4/23/86
CHECKED: K. Kitagawa DATE: 9-18-86
ENGINEER: A. Shinagawa DATE: 10-23-86
APPROVED: DATE:
APPROVED: DATE: 10/23/86

ATARI (JAPAN) CORPORATION
Toranomon Kiyoshi Building 3F
4-3-10, Toranomon Minato-ku, Tokyo 105

TITLE: SCHEMATIC DIAGRAM (ASP34-1)

SIZE: B | DRAWING NO. C070798 | REV A

SCALE: NONE | SHEET 1 OF 1